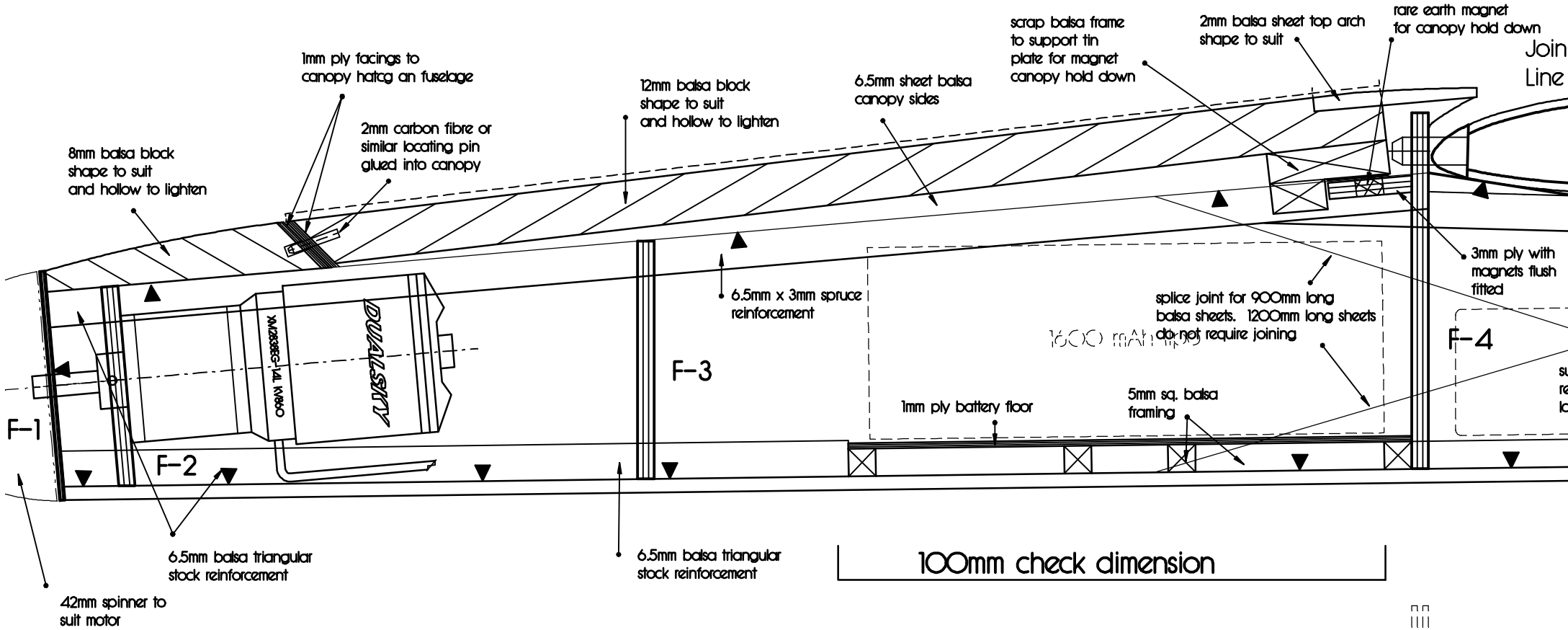

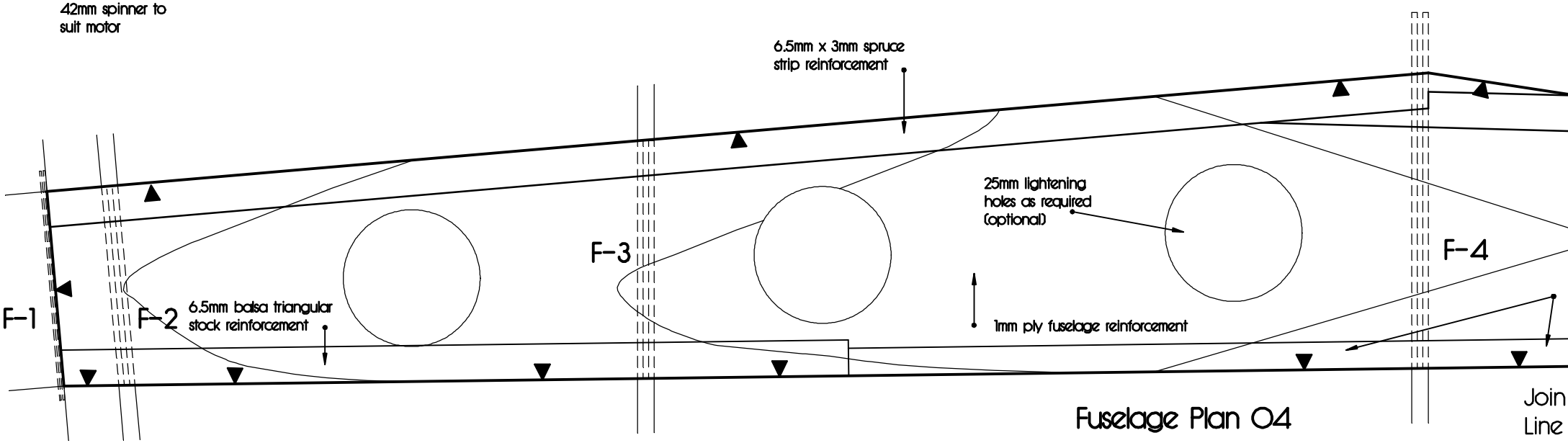

Fuselage Plan 04